REVISIONS				
REV	DESCRIPTION	CHK	ENG	DATE

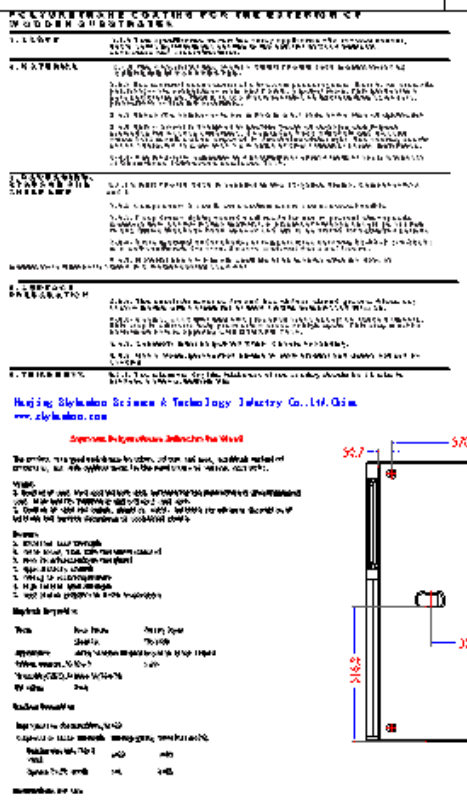
POLYURETHANE COATING FOR THE EXTERIOR OF WOODEN SUBSTRATES

Nanjing Skybamboo Science & Technology Industry Co.,Ltd.China
www.skybamboo.com

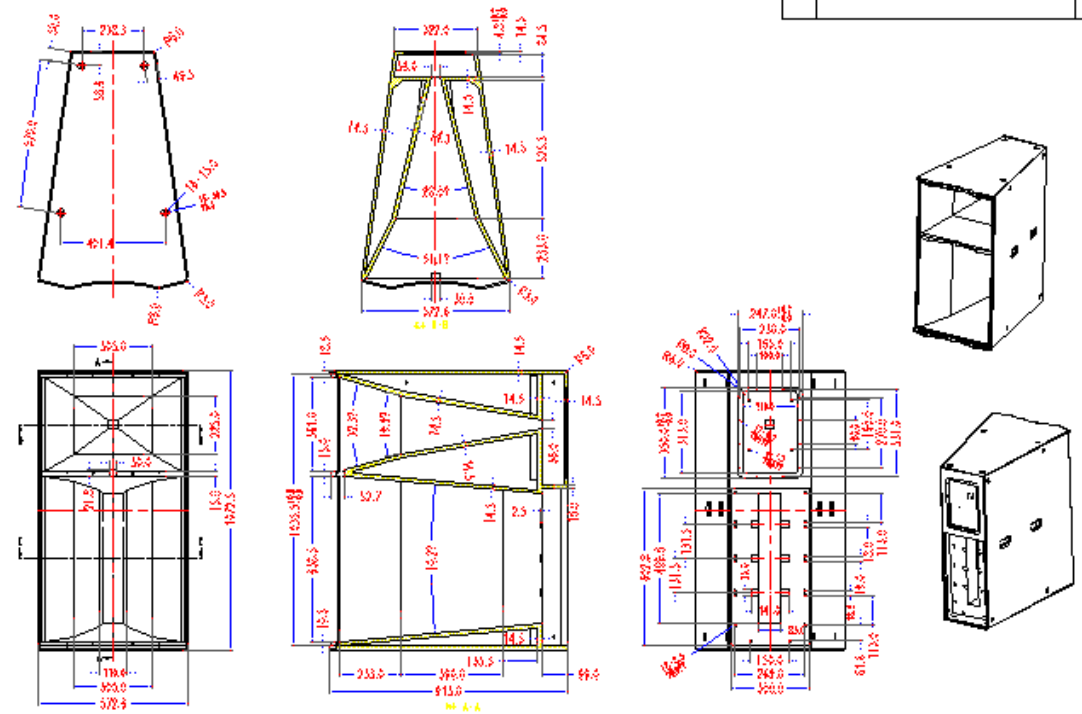

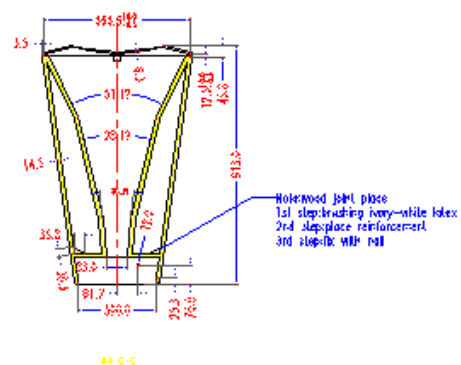

NOTES:
1. Material: 15mm ,12mm Russian plywood
2. Adhesive : Nanjing Skybamboo Science & Technology Industry Co.,Ltd,China SE-100 A,B
3. Brace angle : must meet the brace angle inspection standard (refrelative standard)
4. Rigging insert: must meet the rigging insert inspection standard (refrelative standard)
5. Structure :
   1) It should be T-groove connection between board and board (refrelative drawings for shape and size details)
   2) Fudgement of adhesive intensity is based on wood broken ratio. Ensure the wood broken ratio≥70%
   3) Position, quantity and spec of glue spreading and nails must meet the requirement of relative drawings.
6. Geometry:
   1) Geometry precision must meet the drawing requirement (refrdrawing for details)
   2) Add diagonal inspection to ensure the cabinet structure. The difference between two diagonal should be≤2.5mm.
7. Finish:
   1) color 2) veins 3) shining refrsamples
   4) adhesion ability inspection
8. Key points:
   1) Counter sink of rigging screw: diameter@30.5-0.2; depth 5.5±0.3
   2) Match of grille and cabinet: vertical@0.2mm; horizontal -0.5mm; depth -0.3mm
   3) In the place of compression driver plate mounting (refrattached drawing A), there should be no dent, ridge, glue or paint dot.
   4) In the place of Vcc-2 assembly mounting area (refrattached drawing B), there should be no dent, ridge, paint or calcium carbonate dot.
   5) Two holes of two Vcc-2 assembly should be symmetrical to the cabinet centre, tolerance≤0.5mm.
   6) Mounting hole for the rear cover of compression driver should be counter sink, with depth 5.5±0.3mm. The bottom should be flat, no protrudent dot.
   7) Clear up all blurs before glue spreading and cabinet final assembly. Ensure that there's no blur in the T-groove connection gap.
   8) If there's radiation angle in the joint of horn and cabinet, ensure the consistency of each line direction and symmetry of relative line.
   If it's 0 angle in the joint, make sure the line is clear.
   9) Clear up all surfaces and spread A,B glue on the thread line before fixing rigging screws into brace angle.
   10) Fill the logo groove.

NOTES?
1.15mm ,12mm Russian plywood
2.Lamination of two veneers border upon should be vertical
3.Both side symmetrical veneers of the center veneer are from the same or similar type wood
4.Degree of moisture 6-14%
5.Glue:SA-100;(Nanjing Skybamboo Science & Technology Industry Co.,Ltd,China)BOSE Part No:PT280940
Bonding Properties of Gluts
Impregnation delamination,% <10
Compressive shear strength strength(MPa) wood failure(%)
Manchurian ash (hard wood) >=10 >=50
Spruse (soft wood) >=6 >=65
a.peeling off rate after dipping in test % ?10
b.peeling off rate after ferv. % ?10
6.CHEMTHANE 7030 polyurethane protective coating for wood.
7.CHENMTHANE 1400 aliphatic water-based coating

Unless otherwise specified dimensions are in millimeter. Tolerances are: Decimals Angles X. +/-1.2 +/-- .X +/- 0.5 .XX+/-	THIRD ANGLE PROJECTION	LEVEL 3	DRAFTER	DATE: 09/01/04	ELDER AUDIO MANUFACTORY The Third Industrial District, Wenlang Dongguan Guangdong 523121 China
			CHECKER		DESCRIPTION CABINET L13202-WP
	MATERIAL: See Notes	2	ENGINEER	09/01/04	SIZE C FSCM CLASS DWG NO.: 817-XIKGLW-M4674 REV
	FINISH: See Notes	1	APP BY		SCALE: NONE SHEET 1 of 1

FNAME
REVDATE
USER